BENLEMI

# NAPPY

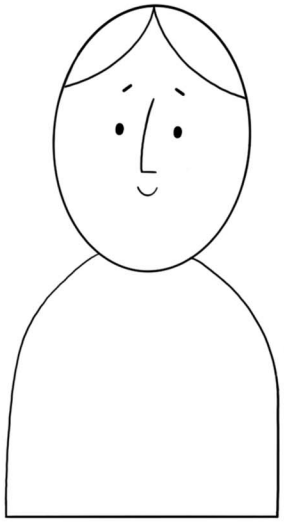

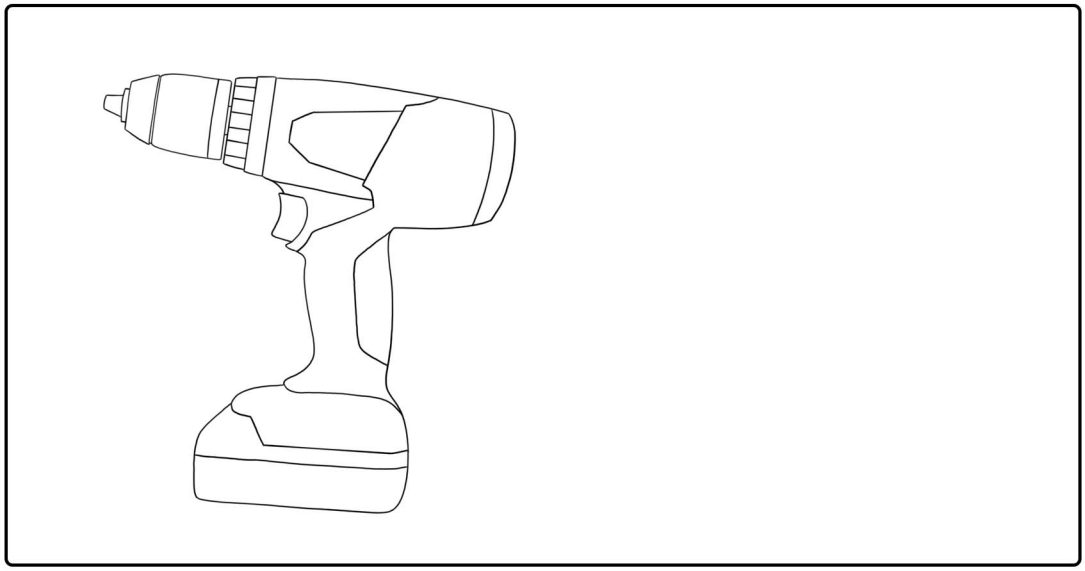

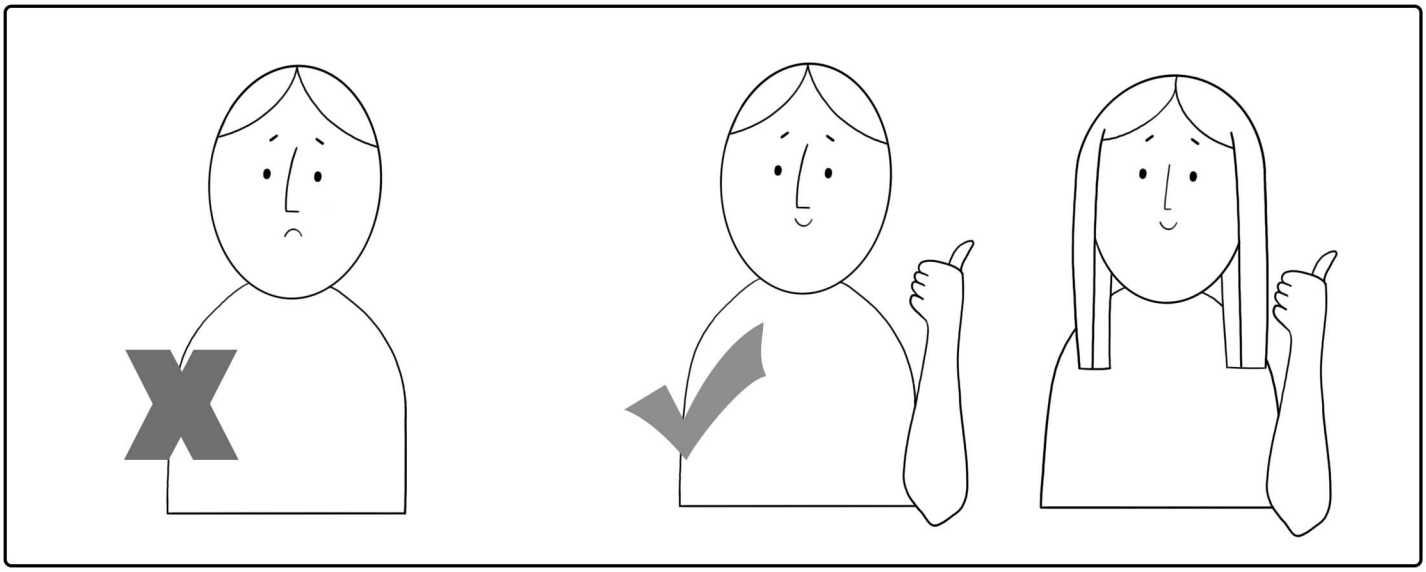

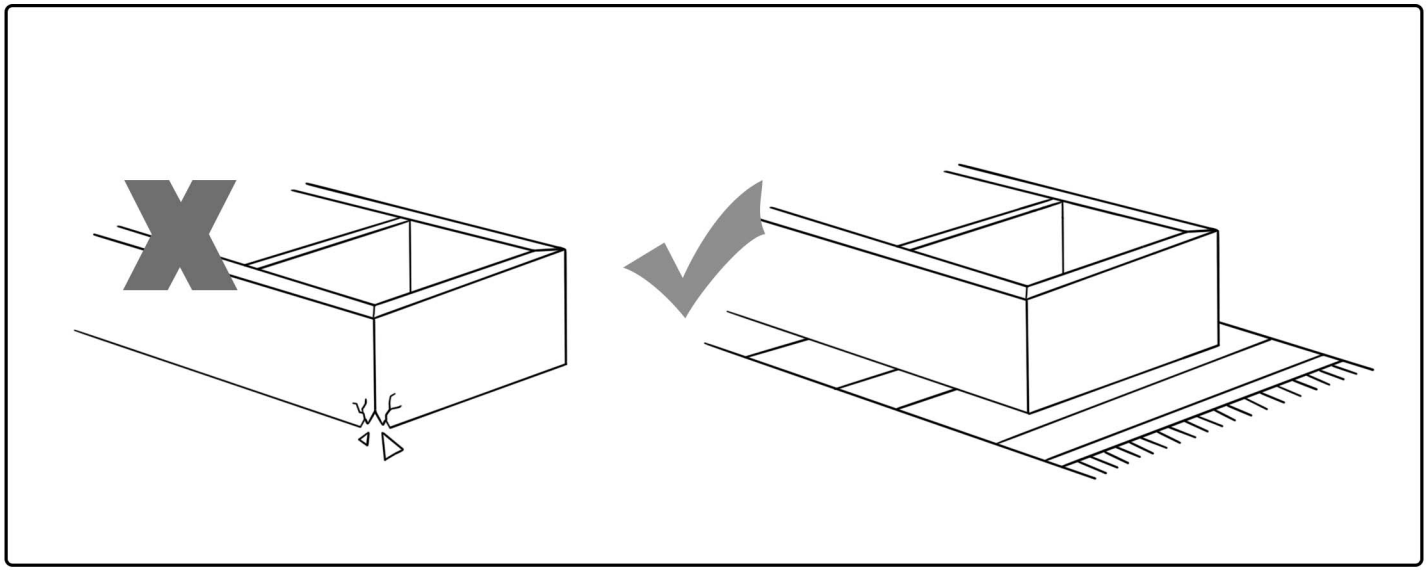

2×

2×

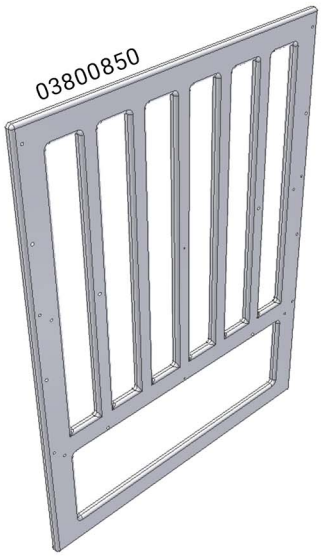


1×

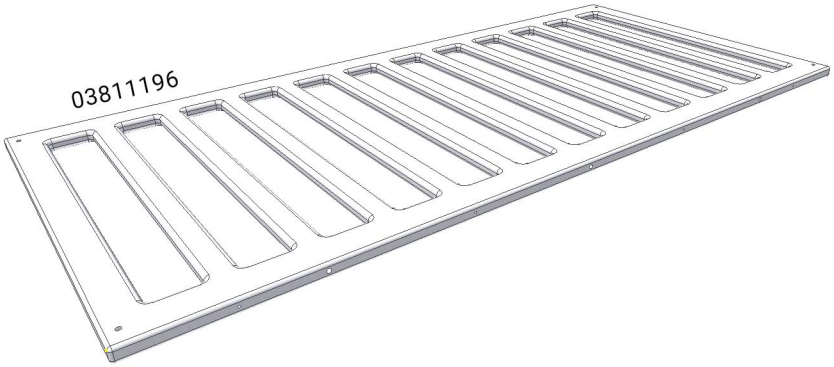


2×

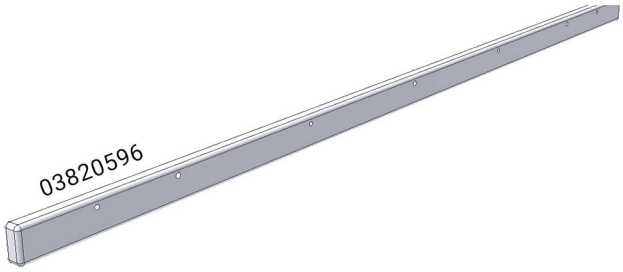


2×

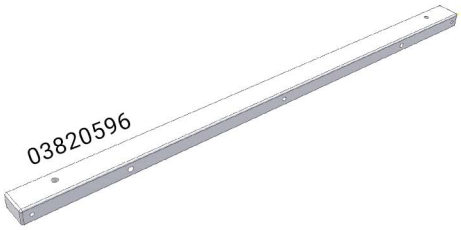


22× KOL6X27

20× KON5X50

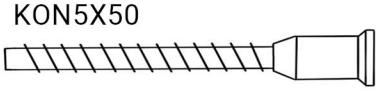

6× KON5X40

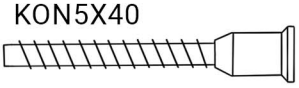

1× IMB4

3× MONTLEP

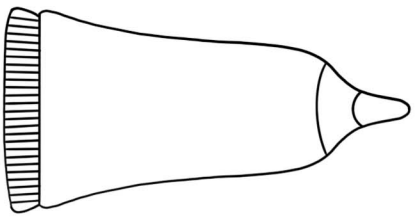

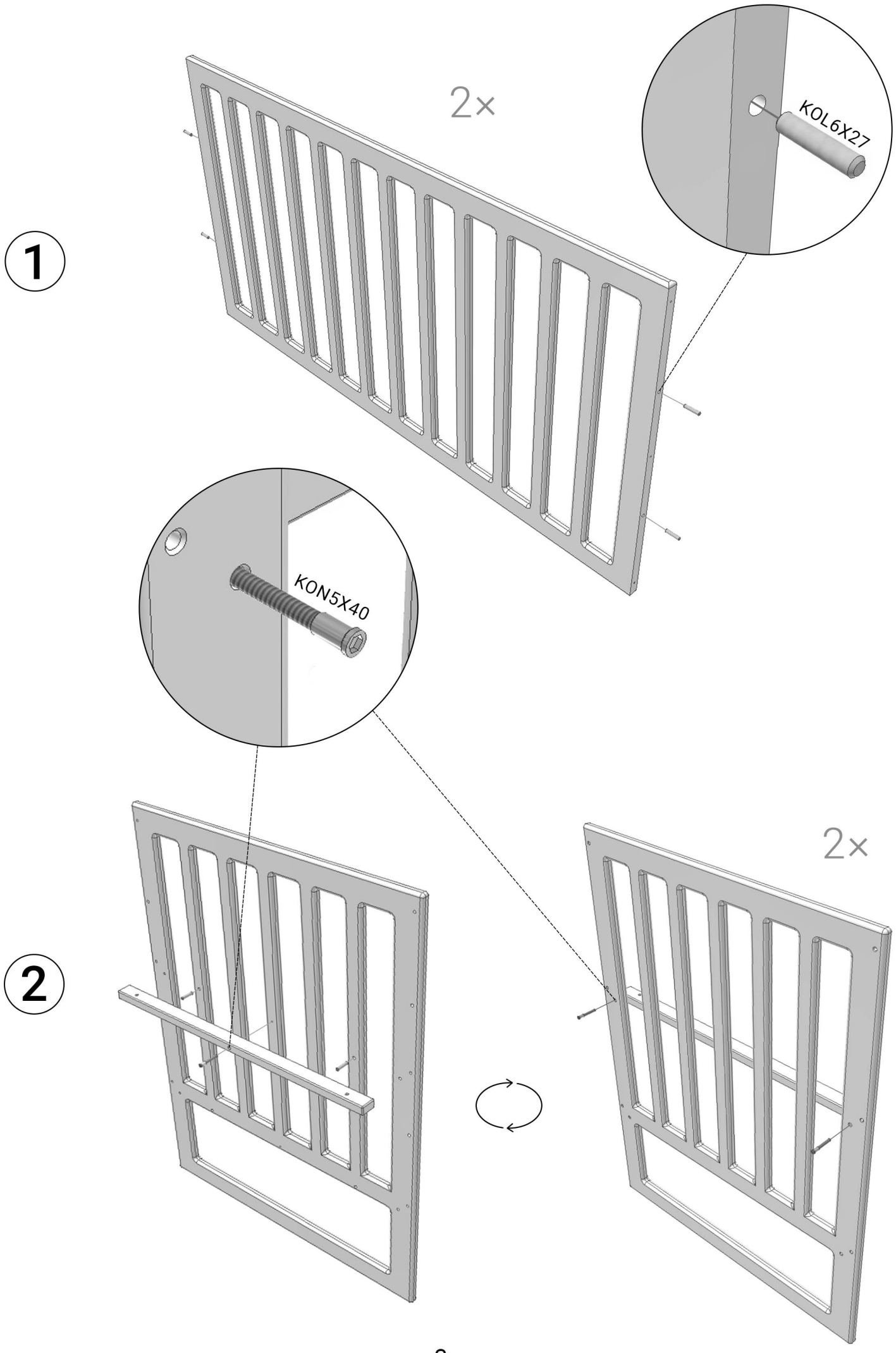
1
2×
KOL6X27
KON5X40
2
2×

3

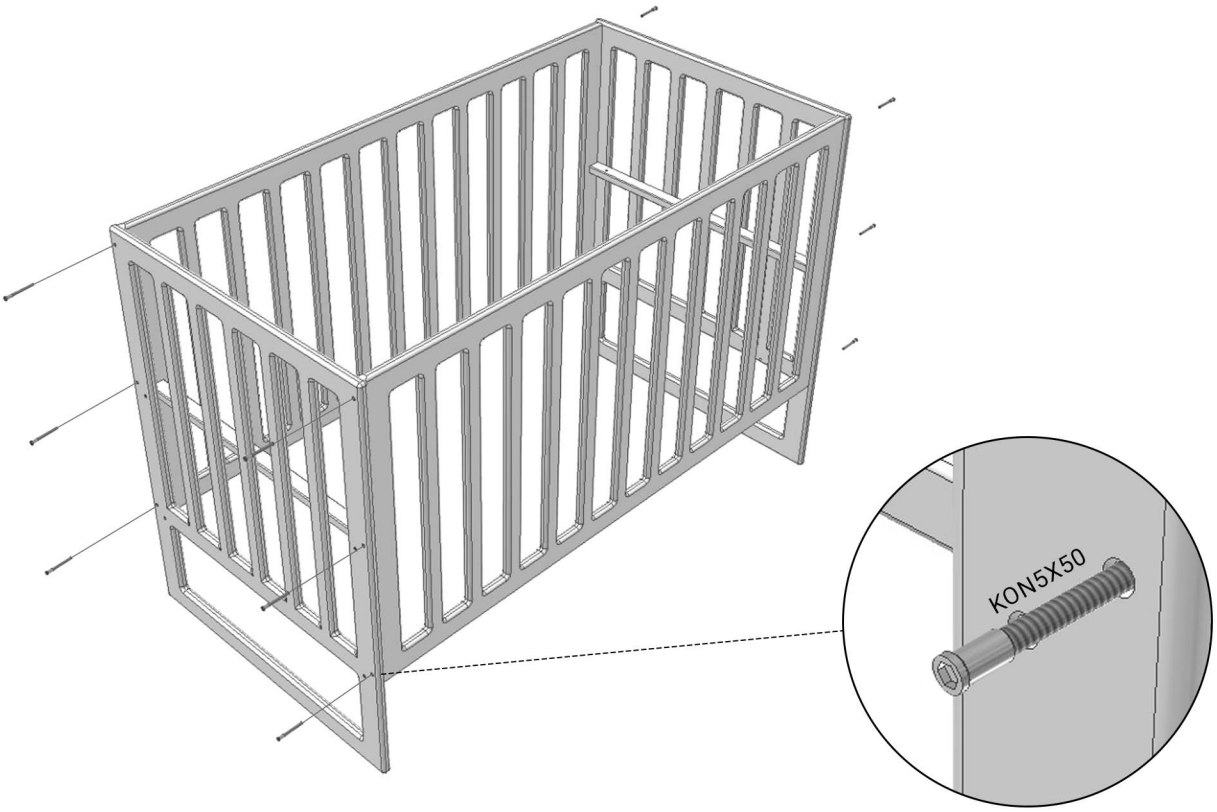


4

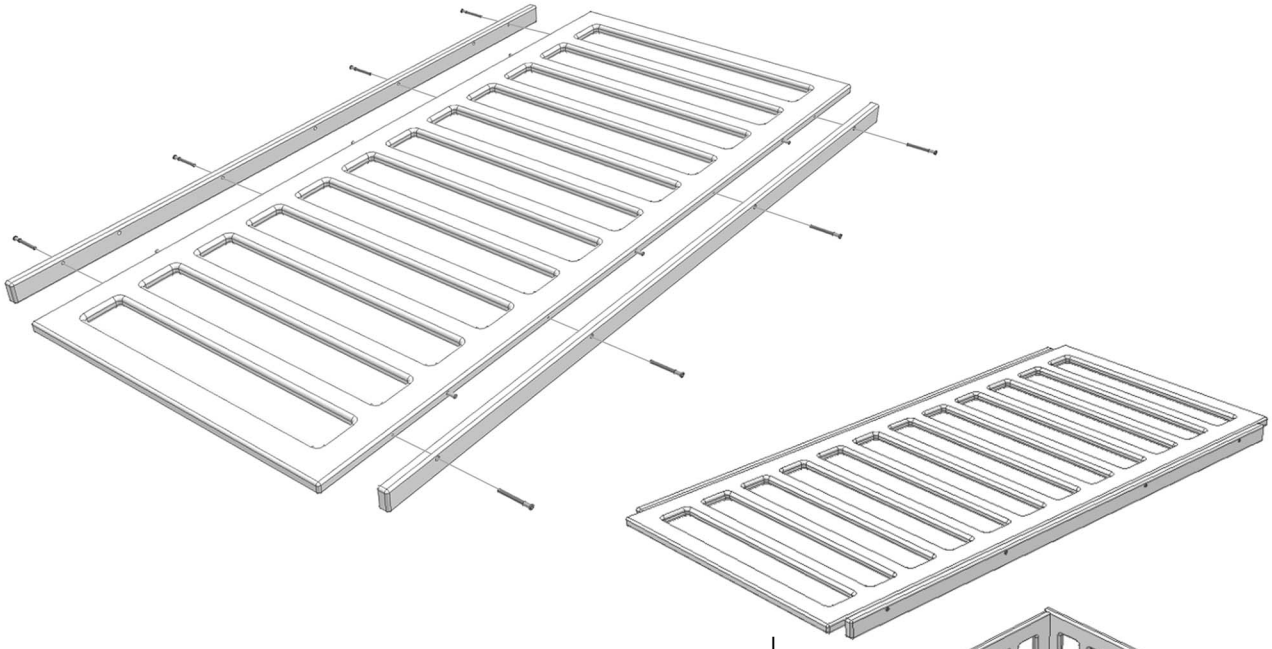
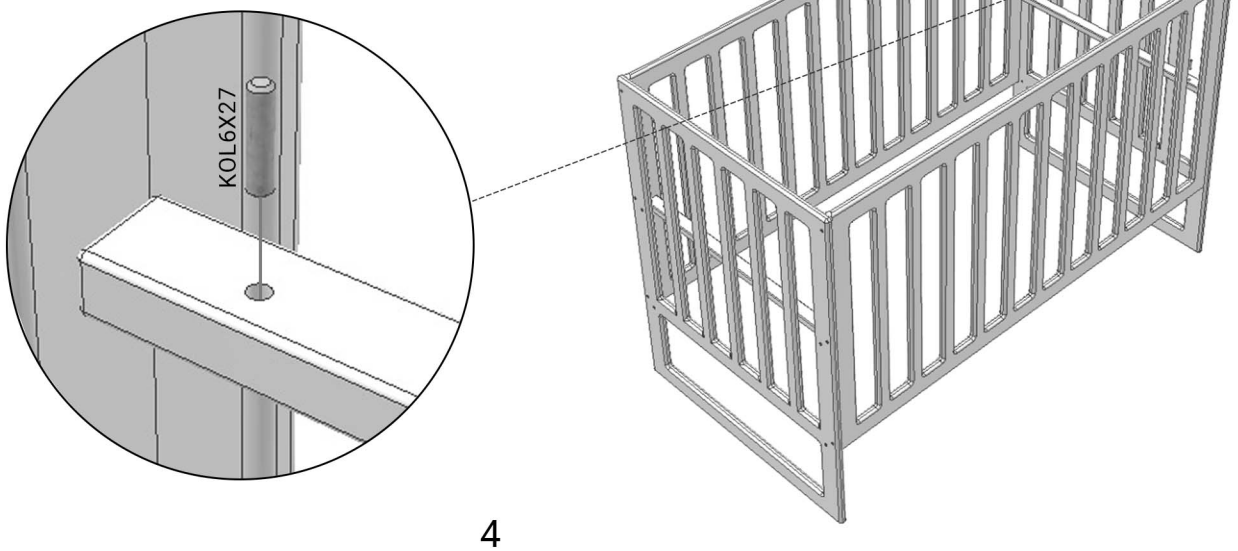
5